S-BPM – S-band / L-band BPM Electronics

Non-interceptive beam position measurement
For linacs, microtrons and transfer lines
Single bunch, macropulse and CW
Beam charge range > 1000

The S-band / L-band Beam Position Monitor (S-BPM) is an electronics module for fast analog processing of beam pickups signals.

Single-pass bunch and macropulses can be measured thanks to parallel processing of inputs.

Macropulses and single bunches up to 2MHz repetition rate can be measured individually. X and Y coordinates are memorized until the next macropulse or bunch.

CW beam can be measured continuously. X and Y coordinates are available permanently. Beam position motions up to 5MHz can be observed.

X and Y outputs are strong analog ±2V signals.

S-band / L-band BPM is compatible with Bergoz' multiplexed BPM and Log-Ratio BPM. They can be plugged in the same chassis.

Precise phase matching of input signals is not required.

Operating principle

Based on the pioneering work of Robert E. Shafer at Los Alamos Laboratory, the Log-Ratio BPM derives beam position from logarithm of the ratio of opposite pickup signals: Log(A/B).
Position measured by this method is more linear, over a wider range, than difference-over-sum.

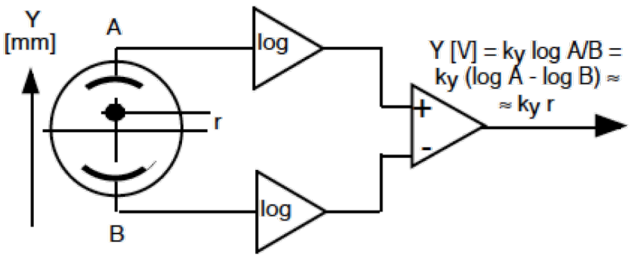

The position of the beam from rotated pickups is obtained by axes translation to the vertical resp. horizontal plane by wideband analog circuits.

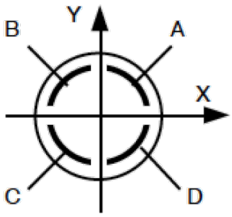

Signal processing

Signals from the pickups are stretched to produce bursts. This is essential to measure the single pass of a bunch. Four parallel logarithmic amplifiers detect the burst envelopes. Amplifiers' response is log of amplitude. Logs of opposite pickups are subtracted. If pickups are rotated, axes are translated to obtain X and Y positions. The process is all-analog, wideband.

Front-end Filter / Amplifier FEFA

One Front-end Filter / Amplifier is required for every BPM pickup electrode. It is tuned to the beam RF or an harmonic and powered from the S–BPM module via the coaxial cable linking them together. S-BPM FEFA must be installed close to the BPM pickup block, e.g. 1 meter.

DISTRIBUTORS

U.S.A.: GMW Associates
www.gmw.com
sales@gmw.com

Japan: REPIC Corp.
www.repic.co.jp
sales@repic.co.jp

India: GEEBEE International
www.geebeeinternational.com
info@geebeeinternational.com

China: Beijing Conveyi Limited
www.conveyi.com
sales@conveyi.com

MANUFACTURER

BERGOZ Instrumentation
www.bergoz.com
Espace Allondon Ouest
01630 Saint Genis Pouilly, France
sales@bergoz.com

S-BPM – S-band / L-band BPM Electronics

Block diagram

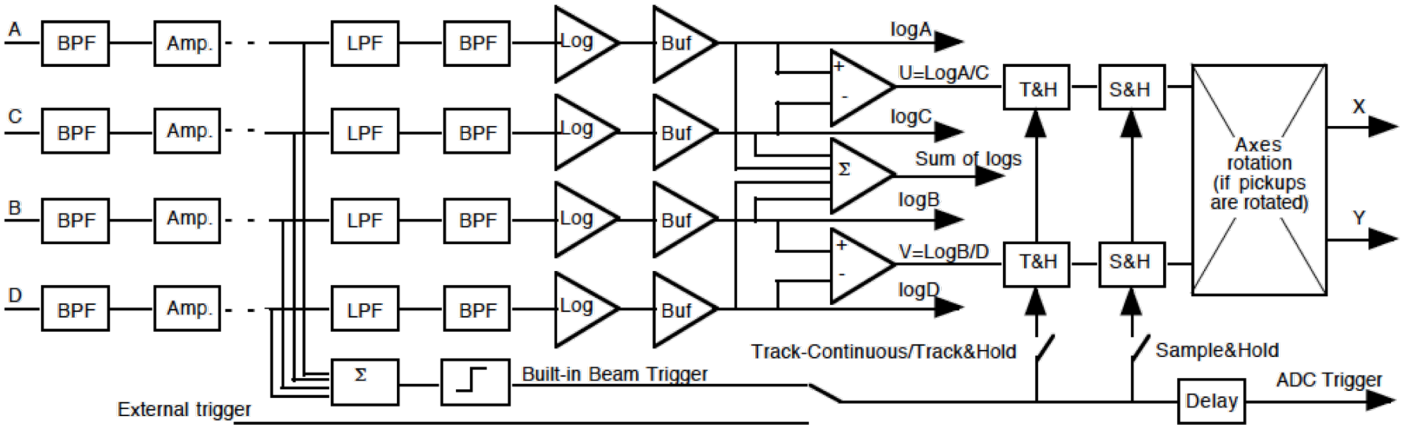

Specifications

S–BPM measures beam position from buttons or stripline pickups. It can measure CW beams or single pass of single bunches and macropulses up to 2 MHz repetition rate.
The position output of CW beams has 5 MHz bandwidth.
The operating frequency is determined by the FEFA Front-End Filter / Amplifier frequency. E.g. S-FEFA/2856MHz.
For S-band, 2 frequencies are standards: 2.856 GHz and 2.999 GHz.
For L-band, all filter frequencies are made to order.

Single bunch range Macropulse and CW	10 pC ... 10 nC* 36 uA ... 36 mA* *assuming 45° pickup subtending angle
Repetition rate	5 MHz max, or CW
Outputs	X and Y: -2V... 0...+2V, 40mA max Sum of logs: 0...+2V, 40mA max
X and Y gain	1.5V = half of radius for orthogonal pickups 1.0V = half of radius for rotated pickups
X and Y noise	For CW beam: <200µVrms, e.g. 2µm rms in a 40-mm pickup aperture For macropulse and single bunch: <7mVrms, e.g. 70um rms in a 40-mm pickup aperture
Intensity dependence	On center: Negligible Off-center: <3% gain error
Temperature drift	6E-4 of aperture per degree, e.g. 25µm/K in a 40-mm pickup aperture
ADC trigger output	When X and Y ready: positive or negative edge
Power supply	+ 15V, <500 mA; – 15V, <500 mA includes power for front-ends

Order codes

S-FEFA/xxxMHz	Front-end Filter / Amplifier Operating frequency xxxMHz One unit for each pickup electrode
S-BPM	S-band / L-band plug-in module

On-board factory-installed options:

S-BPM-SH	Sample and Hold on X and Y outputs
S-BPM-TRG	Beam Trigger, built-in
S-BPM-SUM	Sum of log (A,B,C,D)

Accessories:

BPM-RFC/xx	RF-chassis, ≤16 stations 19" rack-mountable 3U-high EMI-RFI-shielded chassis for 100~245V 50~60Hz mains power
BPM-KIT	Table-top test kit 100~245V 50~60Hz powered kit Pickup inputs on SMAs Outputs on BNCs and DB15
BPM-XTD	Module extender card
BPM-SERV/RF	RF service module Passive module. Brings the pickup signals from the back connectors to front panel BNCs

Packaging

S-BPM module is 3U-high x 160mm shielded Euromodule; 20-mm wide.
Interchangeable / plug-compatible with other Bergoz Instrumentation's BPM modules. S-BPM can be installed in same chassis as LR-BPM, BB-BPM and MX-BPM for mixed application.

DISTRIBUTORS

U.S.A.: GMW Associates
www.gmw.com
sales@gmw.com

Japan: REPIC Corp.
www.repic.co.jp
sales@repic.co.jp

India: GEEBEE International
www.geebeeinternational.com
info@geebeeinternational.com

China: Beijing Conveyi Limited
www.conveyi.com
sales@conveyi.com

MANUFACTURER

BERGOZ Instrumentation
www.bergoz.com
Espace Allondon Ouest
01630 Saint Genis Pouilly, France
sales@bergoz.com